MODEL NO.	"L"	P/N
PBCT46UMI	2000 [79]	71687

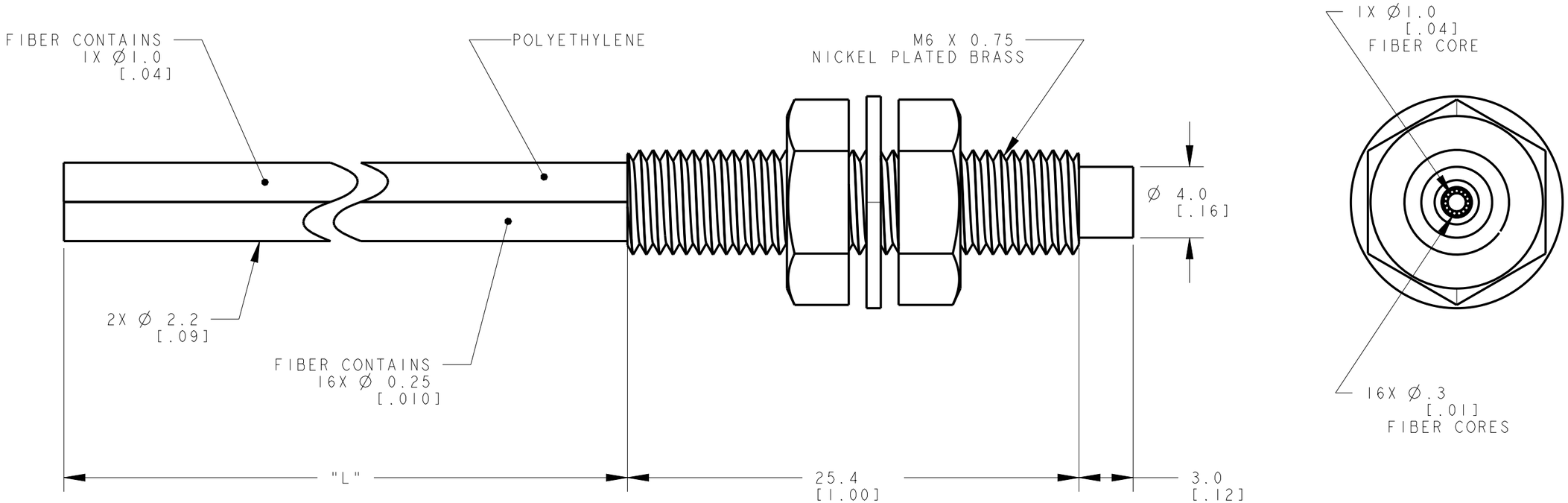

This drawing is the property of BANNER ENGINEERING CORP. Any use or reproduction, in any form, without prior written permission of Banner is prohibited.
© 2015 Banner Engineering Corp.

THIRD ANGLE PROJECTION

BANNER ENGINEERING CORP.
www.bannerengineering.com

TITLE

PBCT4 THREAD LENGTH 1 UNTERMINATED

SIZE	DRAWING NO.	REV.
B	193990	A
SCALE 4:1	SHEET 1 OF 1	

NOTES:
1. ALL DIMENSIONS ARE MILLIMETERS [INCHES] UNLESS OTHERWISE NOTED.
2. REFER TO "www.bannerengineering.com" FOR ADDITIONAL DATA AND SPECIFICATIONS.

CREO